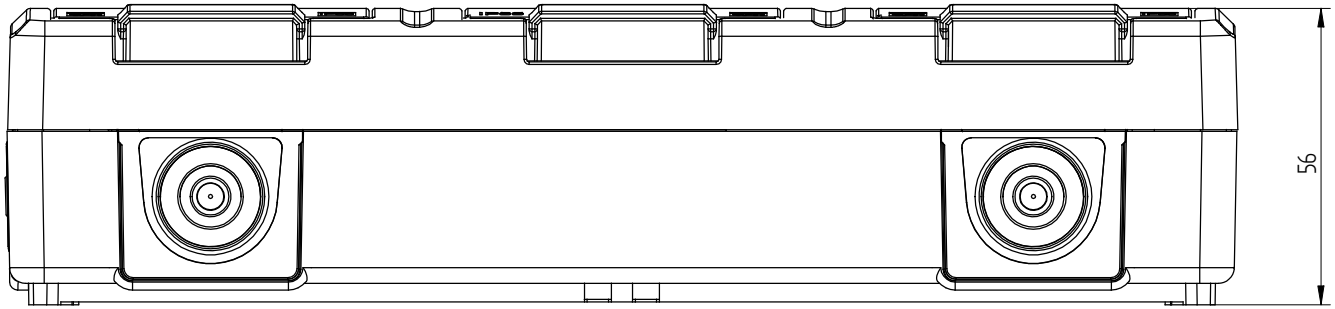
56

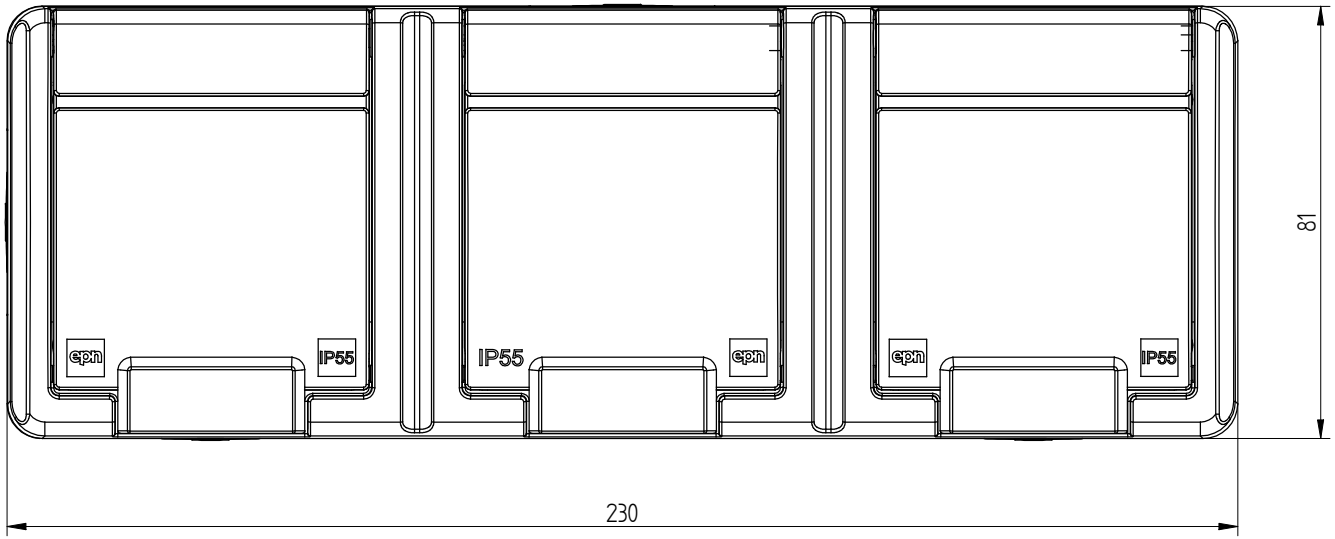
81
230
IP55
IP55
IP55

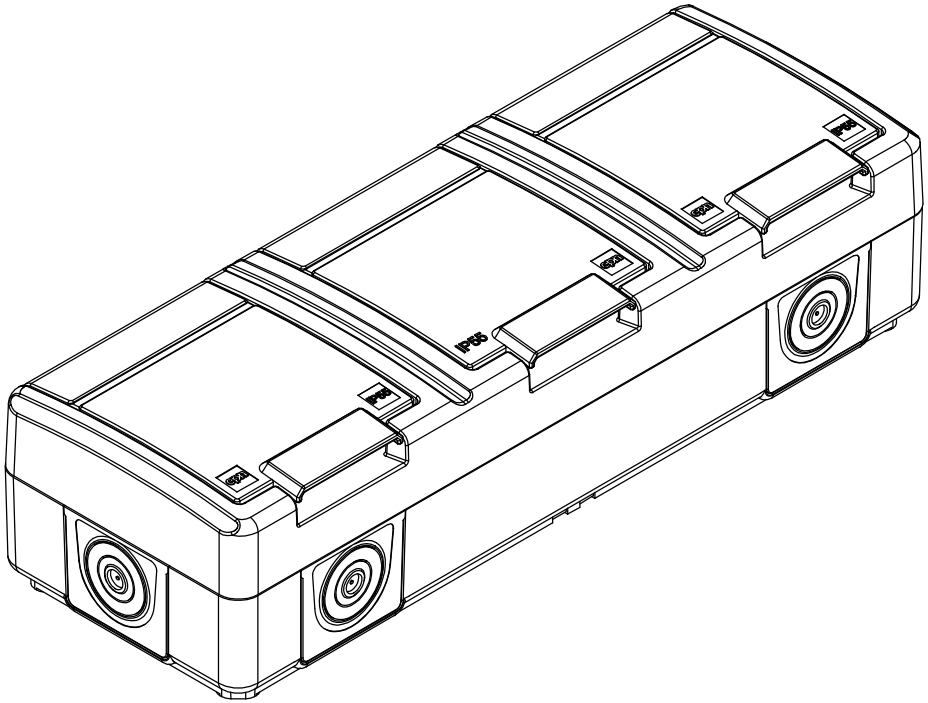

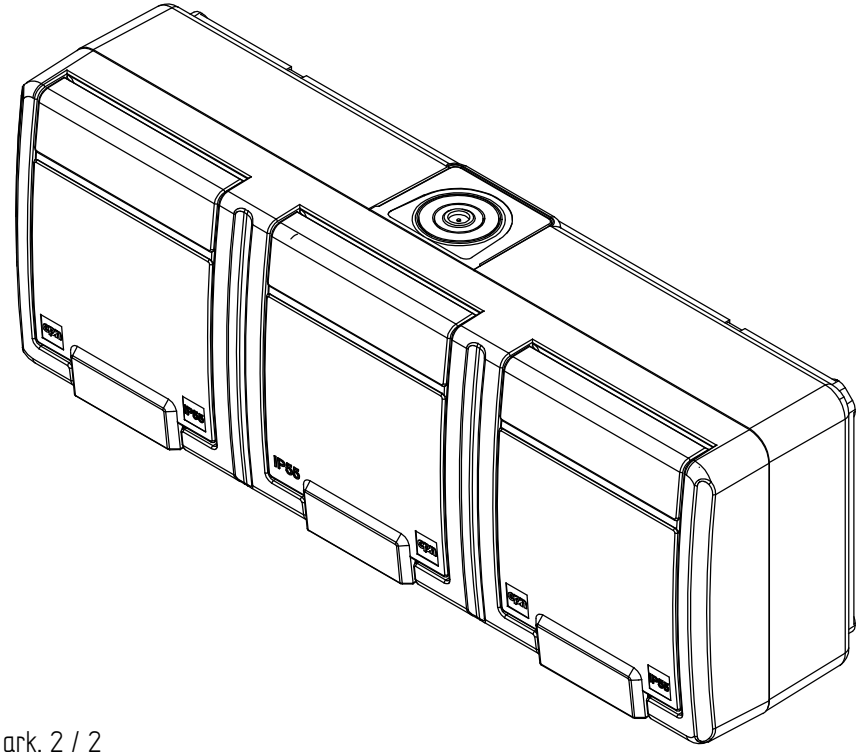

5043-1X ark. 2 / 2

Created by K on %.01.2012